2004 Fall Meeting of the

Division of Nuclear Physics of the American Physical Society

Thursday, October 28
through
Saturday, October 30

Hyatt Regency Chicago
Chicago, Illinois

Pre-Conference Workshops
Wednesday, October 27

For Information, Visit:

DNP04.PHY.ANL.GOV

or contact

D. Morrison
Argonne National Laboratory
Tel: (630) 252-4100
Fax: (630) 252-3903
Email: DNP04@ANL.GOV

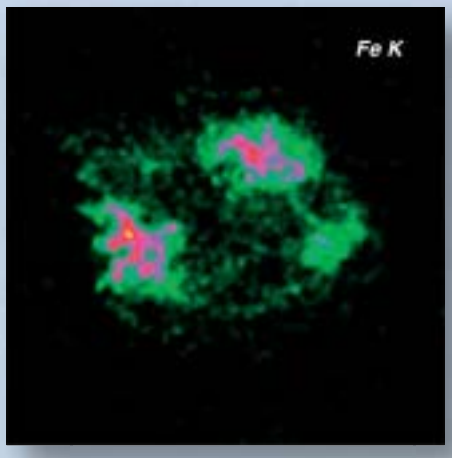

NASA/GSFC/U.Hwang, et al.

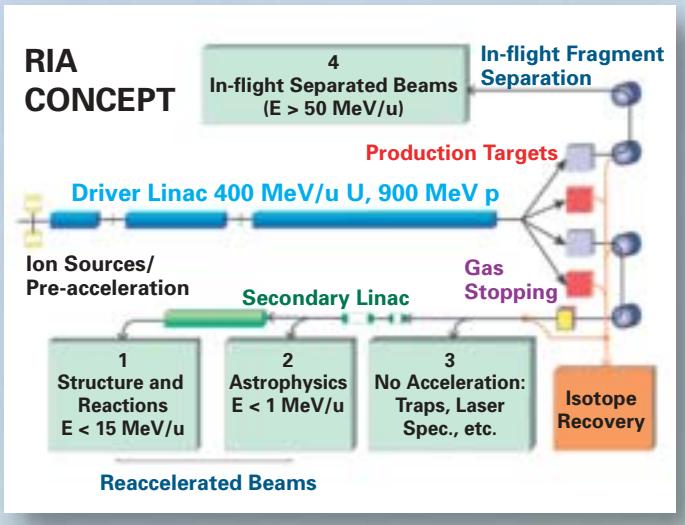

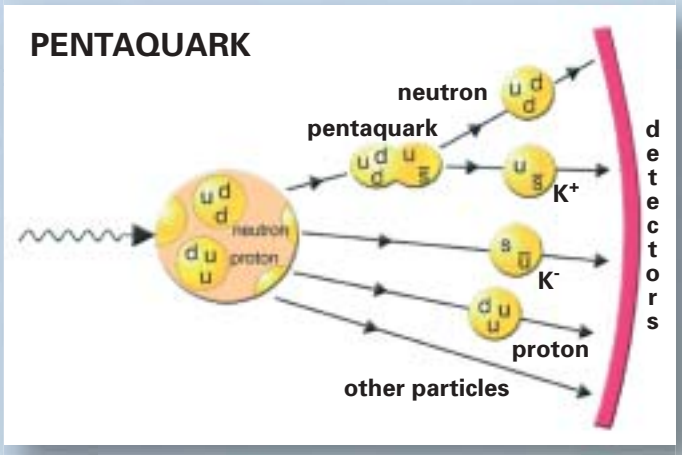

Malcolm Tarlton, AIP

Jeff Mitchell, BNL

Local Organizing Committee

J. Arrington, M. Carpenter, D. Geesaman, R. Janssens, T.-S. H. Lee (Chair), J. Nolen